CAMT Training:
Appliance Maintenance and Repair Course

Clothes Washers | Clothes Dryers | Cooktops | Ovens | Dishwashers | Refrigerators

PARTICIPANT RESOURCE GUIDE

NAA NATIONAL APARTMENT ASSOCIATION Education Institute

CAMT CERTIFICATE FOR APARTMENT MAINTENANCE TECHNICIANS ANSI

Lowe's ProServices

CAMT Online Training

Don't Forget…Take the Online Training for this CAMT Course!

To continue your education, you must also complete a brief online training course titled CAMT Soft Skills and Practice Scenarios.

The course will take approximately 60 minutes. You can access the course on a computer, tablet or smartphone.

1. Go to the following web site link: **www.gowithvisto.org/camtsoftskills**.
2. Click Add to Cart and then Check Out.
3. During the checkout process you will enter your profile and billing information but will not be required to pay for the course. The course is free and no payment information is required.
4. At the completion of the checkout process you will have immediate access to your course.
5. Click on Welcome to Soft Skills to begin. Exit each section and select Continue to be taken to the next module.
6. After you complete the entire course, it will be listed as Complete in the Achievements section of your Visto account. A transcript of completed courses can be printed or emailed from the Achievements page.

LIMITS OF LIABILITY AND DISCLAIMER OF WARRANTY

DISCLAIMERS

Although NAAEI programs provide general information on apartment management practices, NAAEI does not guarantee the information offered in its programs is applicable in all jurisdictions or that programs contain a complete statement of all information essential to proper apartment management in a given area. NAAEI, therefore, encourages attendees to seek competent professional advice with respect to specific problems that may arise. NAAEI, their instructors, agents, and employees assume no responsibility or liability for the consequences of an attendee's reliance on and application of program contents or materials in specific situations. Though some of the information used in scenarios and examples may resemble true circumstances, the details are fictitious. Any similarity to real properties is purely coincidental. Forms, documents, and other exhibits in the course books are samples only; NAAEI does not necessarily endorse their use. Because of varying state and local laws and company policies, competent advice should be sought in the use of any form, document, or exhibit.

POLICY STATEMENT REGARDING THE USE OF RECORDING DEVICES, AUDIO VISUAL EQUIPMENT, AND OTHER MEANS OF REPRODUCTION OR RECORDING OF THE "CERTIFICATE FOR APARTMENT MAINTENANCE TECHNICIANS" MATERIALS

All program contents and materials are the property of the National Apartment Association Education Institute, which strictly prohibits reproduction of program contents or materials in any form without the prior written consent. Except as expressly authorized in writing in advance, no video or audio recording of NAAEI programs or photocopying of "Certificate for Apartment Maintenance Technicians" materials is permitted. Authorized recording of programs or duplication of materials may be done only by the instructor on site.

NAA NATIONAL APARTMENT ASSOCIATION Education Institute

Welcome!

The National Apartment Association thanks you for attending today's Certificate for Apartment Maintenance Technicians (CAMT) course on Appliance Maintenance and Repair.

Course Topics

- Your Are Here: Appliance Maintenance and Repair
- When to Call an Electrician, Plumber or Appliance Repair Specialist
- Overview of Repairs
- Commonly Used Repair Tools
- Diagnostic Plan
- Safety Rules for Appliance Repair
- Chemicals
- Move Appliances Correctly
- Energy Efficiency and Appliances
- Overview of Components
- Installation Information
- Basic Operations
    - Clothes Dryer
    - Clothes Washing Machine
    - Electric and Gas Ranges
    - Dishwasher
    - Refrigerator
- Key Takeaways
- Action Plan

What You'll Be Doing

- Using your *Participant Resource Guide*
- Watching in-class demonstrations and videos
- Having group discussions
- Completing hands-on activities

Ground Rules

- Participate fully.
- Stay with us, both mentally and physically.
- Ask questions.
- Share ideas.
- Tell us about your experiences.

You'll only get out of this class what you put into it, so give everything you can.

You Are Here: Appliance Maintenance and Repair

To set the stage for the course, you and your fellow participants will identify your key roles and responsibilities as they relate to appliance maintenance and repair.

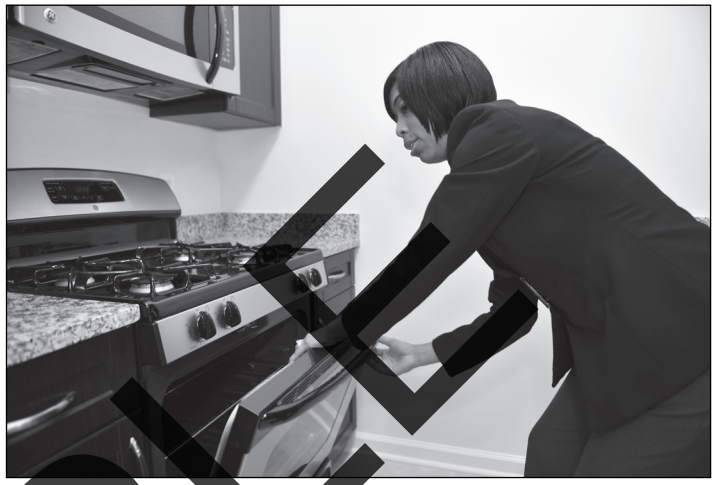

Notes:

You Are Here: Appliance Maintenance and Repair (continued)

Appliance repair is a required skill that an apartment maintenance technician uses almost daily. It encompasses technical skills in addition to the ability to communicate with coworkers and residents for repairs.

When to Call an Electrician, Plumber or Appliance Repair Specialist

You'll need to call an electrician, plumber or appliance repair specialist when:

- State or local regulations require it.
- You don't know how to do the task or feel uncomfortable doing it.
- Your workload is too heavy, or when you can't do the repair in a reasonable timeframe to satisfy the boss or resident. Consider the time/cost benefit.
- The physical size or nature of the job is too big.
- When the broken item is still under a warranty.

  If a professional comes on site to do a repair or replacement, watch what they're doing and ask questions—you might be able to do some or all the work if it happens again.

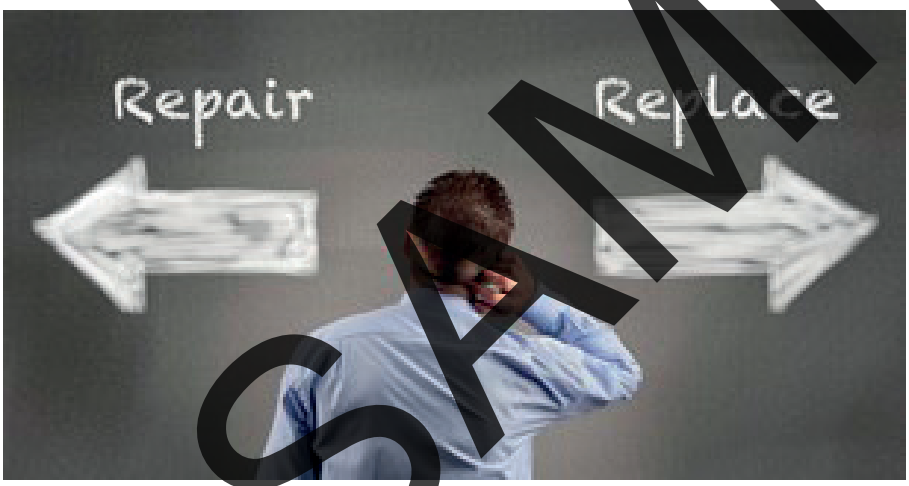

Repair or Replace?

Two important considerations for a technician include when to repair versus replace, and how to work with equipment still under warranty.

1. **When to repair versus replace:**

   The decision whether to repair or replace is always based on the dollar amount as well as the amount of time it would take to repair a given appliance. There are four situations in which to make this consideration:

   a. We can repair now.

   b. It is repairable but we don't have the parts/the time – the unit may be switched out.

   c. It is repairable but will cost more than buying a new one.

   d. It is not repairable, let's get a new one.

Technicians should always refer to company policy/procedure/standards before making this decision. Technicians are always required to determine which of the four possibilities applies in any situation and to make an INFORMED decision as to the course of action.

2. **How to work with equipment still under warranty:**

   ALL POSSIBLE EFFORTS to maintain the manufacturer's warranty and exercise that warranty should be taken. These efforts include the following:

   - For each appliance, document the date of purchase, serial number, date of installation, make and model.
   - Always check the current warranty status of an appliance.
   - Attempt no repairs until the warranty status and parameters are understood and established.
   - Understand warranty length and relevant company policies.

Overview of Repairs

Even though different appliances have different functions, there are many similarities among appliances' components and their functions. For instance:

A fan motor relay is typically operated by a magnetic coil. When energized, the coil's magnetic field causes movement of contacts on a switch from open to closed or from closed to open. If we were to place a water valve in place of the contacts, we would essentially have a fill valve for an icemaker, dishwasher or washing machine (as found in a solenoid valve).

By being aware of common operations and their appropriate sequence, we can diagnose malfunctions of appliances.

A technician does not need to know how every different make and model of appliance operates. Instead, a technician needs to know the following:

- How to identify the common components
- How these components are designed to operate
- What is the proper sequence of operations
- Which tools and methods are needed to identify the proper operation

With this knowledge, the technician then can identify all symptoms, diagnose the issue and solve the problem

Commonly Used Repair Tools

PPE 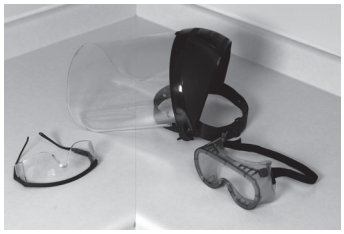	**Flashlight** 	**Inspection mirror** 
Insulated Screwdriver (Phillips and flat head) 	**Nut drivers** (1/4 and 5/16 are most common) 	**Portable vacuum** 
Coil brush 	**Multimeter** (Volts, Ohm) 	**Thermometer** 
Adjustable pliers 	**Lock out Tag out devices** 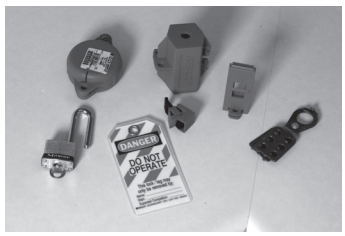	

Notes:

Diagnostic Plan

Any issue with an appliance requires a technician to diagnose the problem first before attempting a repair. Here are some suggested strategies for troubleshooting, and a summary of each step:

Listen

- Pay attention to the words used to describe a problem
- Actively participate in the conversation with the resident by asking questions such as "When did it start? How often does it happen? Does it make a different sound? What happens if you do X, Y or Z?"

Observe

- Try to operate the appliance normally
- Try to duplicate what the resident had done (add soap!)
- Compare your observations (what happens this time) with what is supposed to happen during normal operation of the appliance

Research

- Find the historical information for this appliance
- Locate past service requests for this appliance
- Find and keep for reference manufacturer-supplied information. Often this information will include common, known issues and related troubleshooting and repair information
- Look for any other relevant information, including recalls, service bulletins, installation instructions

Access and Test

- Do not try to "shortcut" any repair by not completely replacing all components, fasteners or panels/doors during a repair
- Follow all safety requirements to perform repairs. These may include:
  - Restricting access to a disassembled appliance while repairs are occurring
  - LOTO controls while servicing
  - Removing the appliance while service is required
- Use the correct tools for the job
- Protect work surfaces, i.e., floors, cabinets and countertops

Document

- Describe any replacement or repairs as performed
- Include possible causes and any situational needs or training that may need to occur for the resident to use the appliance correctly (as required by your company procedures)
- If a return trip is needed due to parts non-availability, note the next steps and a proposed timetable
- Make sure this timetable is communicated and explained to the resident
- If a new appliance is required, record the warranty information for later use

Replacement/Repair

- Do not make promises to a resident regarding a replacement appliance. This information should be communicated by the property manager. Have all the facts before discussing any possibility for replacement.
- Know the allowances that the company/owner policy sets for appliance replacements

Safety Rules for Appliance Repair

1. Turn the power Off
2. There is NEVER a reason to make replacements or perform repairs on any energized equipment
3. If the power needs to be on to diagnose equipment, observe all safety needs:
    a. Use insulated tools
    b. Be aware of hand placement and attempt to keep distance of electrical path through your body to a minimum (do not lean on a conductor with your other hand while testing)
4. Use Lockout/Tagout
    a. Shut off the source of the water or electrical power
    b. Attach a lockout device to this source, then lock and tag it
    c. Release or drain any energy left in the plumbing or electrical lines or equipment
    d. Test to be sure the energy is turned off and removed from the pipes, circuits or equipment
5. Follow all manufacturer's instructions as well as regulatory requirements
6. Find and retain a copy of provided documentation for each appliance in the community. Examples of this are:
    a. Installation guide
    b. Service/technical manual
    c. Warranty information
7. Consider making a property-wide appliance inventory containing make/model/serial information kept in the office for reference as needed. This can be used for both warranty documentation as well as budgeting and training purposes
8. Do NOT bypass or change any appliance in a way that differs from a manufacturer approved repair. (examples would be to bypass a fuse or safety switch)
9. 208/240v appliances are to be wired using a separate, dedicated case ground.

Chemicals

Safety Data Sheets (SDS) should be retained for all chemicals used or stored by/at the apartment community. In addition, technicians should be aware of commonly found problems/issues:

- Oven cleaner should not be used in a self-cleaning oven unless the product specifically states it is safe to do so.
- Ammonia should not be used to clean plastic parts such as inside of the refrigerator. It can discolor the surface and make the plastic brittle.
- Care should be taken any time a chemical is used to clean or perform maintenance on an appliance used for food preparation. It is possible residents may have an aversion to it and the technician should be aware of this possibility.

Chemicals should be used ONLY as their manufacturer intended. Observe the rules such as:

- Do not over/under dilute concentrated products. They are to be used as designed. (More chemical does NOT mean that it will perform better. It may cause the over concentrated chemical to underperform.)
- Do not mix chemicals unless it is under the specific instruction of the manufacturer as being intended for such use.
- Never add water to chemicals, only add chemicals to water.
- Always use appropriate PPE.

Move Appliances Correctly

- Use appropriate dolly or cart as needed
- Follow proper lifting technique for moving them
- When possible, use help as many appliances are heavy and awkward to move
- Walk the path before moving the appliance to remove any obstructions

Which Brand?

This section of the Certificate for Apartment Maintenance Technician curriculum is based upon the most common appliances generally found in the apartment industry. It is impossible to include specific information for every brand and model available.

To meet the challenge of providing useful information to make repairs on appliances, this book will cover basic standards that can be applied to the most common types of equipment. It is possible that to complete a service request on an appliance the technician will need more detailed information than this book can provide. In that instance, it is recommended that information be obtained from the specific manufacturer. Sources for further information include:

- The manufacturer's website
- The manufacturer's technical manuals
- Installation manuals
- Schematics and diagrams that are included with the appliance

Always follow all safety rules and instructional guidelines as given by the manufacturer.

Energy Efficiency and Appliances

In the past several years appliances have experienced extensive changes due to newer energy efficiency concerns. These changes have been as minor as increasing the amount of insulation used in a refrigerator, or as major as replacing what was formerly a simple analog type switch with a programmed, computerized control system that takes multiple factors into account. Many appliances manufactured today have newer efficiency features.

It is also possible that the manufacturer requires a specific procedure to be completed, or a certain chemical to be used. Therefore, it is extremely important that for every appliance found at a community, a reference copy of the manufacturer instructions be maintained. Often this material can be used as backup when talking with a resident about proper use.

If an appliance is rated as high efficiency (e.g., Energy Star, HE) there are some changes to the traditional usage and/or design that may be required of residents for the appliance to function correctly. For example:

Washing Machines:

- HE-rated soap must be used when required
  - This soap has a higher concentration and performs better with less water
  - The soap is added before clothes (or in a separate compartment). If clothes are added before the soap, and the soap is undiluted, it can damage the cloth
  - If "pods" are used, they are to be placed in the empty washer BEFORE the clothes are.

- When viewed through a window (if the machine has one) the user will see less water and think the machine is malfunctioning. This is because HE machines produce fewer suds due to the lower water usage.
- Technicians need to make sure to address these changes with the resident. If a misuse is suspected, contact the supervisor to ensure there are appropriate communications to resolve this matter.

Dryers:

- Dryers are not designed to dry wet clothes, only damp ones.
- Dryers have lower temperatures and longer drying times to decrease amount of run time for the elements.

Dishwashers:

- Rinse aid is REQUIRED. Due to the lower amount of water usage, rinse aid increases the solubility of the soap during the rinse cycle to ensure that all the detergent is removed.
- Follow the manufacturer's instructions as to the quantity of soap required. If too much soap is used, it is LESS effective.
- To use less power, the heating element is timed to only raise the temperature of hot water to the operational level.

Refrigerators:

- To maintain the volume of the interior space with the added insulation requirements, the condensing coil design has been changed from its typical flat, easy-to-clean design to a new "jelly roll" coil that is more difficult to clean.
- Instead of a simple timed switch to control the defrost cycle, the defrost operation takes the following into account using a circuit board:
  - Operational time
  - How often and long the door is open
  - Ambient temperature
  - Defrost cycle duration
- As there is a computer board, it is possible for a resident to accidentally activate the diagnostic cycle. Depending on its operation, it is possible that this cycle will stop some/all operation of the refrigerator.
- Technicians need to make sure to address these changes with the resident. If a misuse is suspected, contact the supervisor to ensure there are appropriate communications to resolve this matter.

Notes:

Overview of Components

Now let's look at some of these common components.

Component	Appliance	Purpose/Description	Testing Method	Electrical Symbol
Switch (SPST)	All	To open/close electrical connection (Does not turn things on/off even though that may be the result of opening/ closing a connection)	Continuity tester or Ohm tester (Low Ohm indicates closed switch)	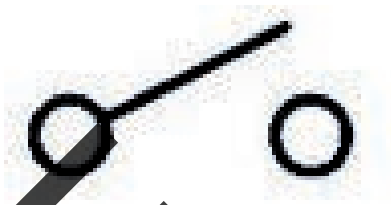
Limit Switch/ Thermometer	All	This switch's contacts open/close due to temperature. Though commonly made of bimetal, other methods include gas filled tube (cold control) and resistance (newer oven regulator)	Continuity tester or Ohm tester (if resistance is used, the quantity of Ohms is used to open/close contacts)	
Relay	All	Energized magnet causes contacts to open/close based upon design.	Ohm out magnetic coil, verify voltage to relay control and test continuity through contacts	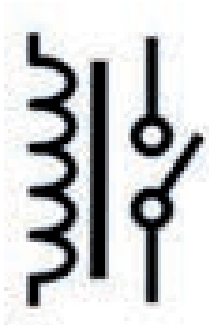
Motor	All	When energized a motor takes electrical energy and causes rotation	Ohm out circuit going through the motor. Should not have continuity to shell/ground. Motor should have some resistance (quantity depends on design and purpose). If no resistance is found, motor needs to be replaced. If infinite resistance (OL) is found on meter, motor needs to be replaced	

Component	Appliance	Purpose/Description	Testing Method	Electrical Symbol
Solenoid	Dishwasher, Washing Machine, Icemaker, Self-cleaning oven	When energized, a magnetic field causes motion or an action to occur. Commonly used to open/close a water valve. Can also be used to activate a door latch	Ohm out magnetic coil, verify voltage to relay control and test continuity through contacts.	
Heating Element	Dryer, Dishwasher, Refrigerator (defrost heater), Electric Stove	When energized this resistive material produces heat	Ohm, (Should have specific resistance) Note: Resistance will change as temperature changes	
Magnetic Coil	All	When energized, this coil produces a magnetic field (field charge) that can be used to perform various functions. Found in Motors, Relays and solenoids	Ohm, (Should have specific resistance) Volts (verify line voltage present and check for desired work)	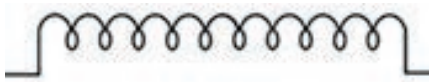
Timer	Laundry equipment, Refrigerator, Dishwasher, Some Stoves	Device that uses time intervals to open/close various switches on an appliance. Often the timer is a combination of a motor that opens/ closes switches in the order determined by a rotating shaft attached to the motor.	Schematic, Voltage, Ohm	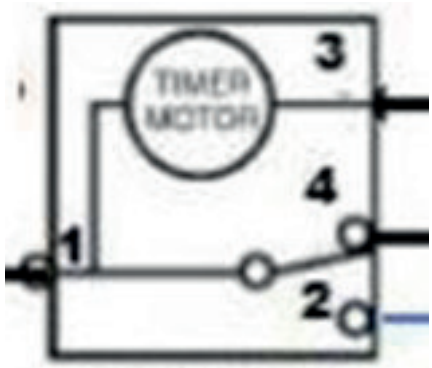

Component	Appliance	Purpose/Description	Testing Method	Electrical Symbol
Circuit Board	All newer equipment	Due to energy efficiency concerns, circuit/logic boards have replaced analog timers. These devices open/close contacts based upon different conditions that can include operational as well as user desired settings to ensure the best operation using the least amount of resources.	Frequently, self- diagnosed or test cycle (verify by MFG instructions). Voltage meter (verify line voltage) and check operation	
Thermostat	All	Temperature sensing device (Bimetal, Substance filled capillary, or Resistance) that opens/closes switch based upon temperature change.	Continuity, Thermometer, Voltage	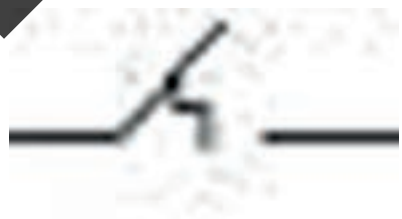
Contacts	All	Point at which an electrical connection is complete or broken. Often found as a part of a switch or relay.	Continuity, Voltage	
Fuse	All	Component within a circuit designed to fail if overheated. Note: if the fuse has failed, it is an indicator that there is a problem with the appliance/circuit, not just with the fuse itself.		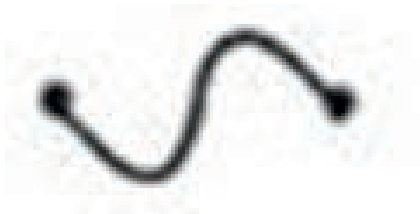

Component	Appliance	Purpose/Description	Testing Method	Electrical Symbol
Terminal Block	Stove, Dryer	Often found on 208/240 volt appliances, the terminal block should be checked at installation. If the threaded terminals are loose or overheating, a shorting can occur.	Visual, Ohm, continuity	
Thermistor	Stove, Dryer, Refrigerator	An appliance as a temperature regulator or sender. This device changes resistance (Ohms) as the temperature increases/ decreases.	Test for Ohms based upon manufacturer standards. Heat the device and use MFG documentation to verify correct value for temperature.	

Notes:

Installation Information

Sometimes, an appliance is not working correctly due to improper installation. This frequently occurs when a resident is responsible for installation, such as with laundry equipment. It can also happen when the appliance is moved and reinstalled during nearby repairs/replacement such as moving a stove to replace the floor or disconnecting a dishwasher to perform counter or cabinet work. Always follow all manufacturer installation instructions.

Here are some common installation-related items a technician should be aware of that can be identified quickly and solve future problems.

Clothes Dryer Installation:

- Install on a solid, level surface
- Ensure proper airflow, both around the appliance and for the entire room
- Exhaust duct length should be as short as possible; hard pipe or solid flex pipe is preferred
- Room should be kept clean
- Correct plug/power should be used. Install plug with breaker turned off and then energize after plugged in.
- Adjust feet to level, side to side and front to back

Washing Machine Installation:

- Replace hose washer in supply line hoses
- Install on a solid, level surface
- For the drain to be installed correctly, it needs to be:
  - at least 26” above the floor for front load
  - at least 30” above the floor for top load
  - at least 1½” opening for the pipe
  - air gap at connection point (not sealed to prevent siphon)
- Remove shipping straps, rod, and screws
- Open faucets fully, with temperature connections made correctly
- Adjust feet to level, side to side and front to back

Stove Installation:

- Solid, level surface
- Proper clearance above stovetop per code
- Anti-tip device installed
- Proper venting provided
- Adjust feet to level, side to side and front to back

Dishwasher Installation:

- Adjust feet to level, side to side and front to back
- Proper electrical connections made to local code
- Proper water supply line connections; nylon ferrules with plastic, copper ferrules with copper
- Drain line installed correctly
    - Hose has no kinks
    - Elevate hose to at least ¾ the way up the side of the tub before traversing to drainpipe or disposal
    - Install air gap as required by local code
- Firmly connect to underside of countertop
- Hot water supply connected using vibration dampener if required (no push-fit connections hard-piped to dishwasher)

Refrigerator Installation:

- Installed level side to side with slight front elevation (back is a little lower than front)
- For proper clearance, door swing needs to be installed so that the handle is on the side toward the middle of the room (unless the refrigerator is in the middle of the room)
- Proper clearance around the refrigerator (approx. 1” around all sides and top)

Notes:

Basic Operations

Clothes Dryer

The clothes dryer is a modern convenience that is often taken for granted. When damp clothing is placed into it, and the machine is started, there are two main operations that occur to speed evaporation of the moisture.

The clothing begins to tumble in the drum so that cycled heated air will be circulated throughout the clothing. The motor will provide both the movement of the drum, often accomplished by a thin long belt, as well as moving the blades of the blower. The second operation that occurs is the heater warming up the air pulled by the blower from the room. This heated air will speed up evaporation. As the warm air is drawn thorough the clothes, both moisture and lint get removed from the clothes.

Much of that lint will be deposited on the lint screen. This screen needs to be cleaned before every load placed into the dryer. What does not get caught on the screen, will eventually restrict the air flow by depositing on the duct used to vent the moist air from the building.

The drying time and temperature are controlled through various means depending on manufacturer design. Often, the user can control the temperature using a control knob/button that allows for a setting of low/medium/high. These settings will correspond with the temperature of the air in the exhaust duct. This means that the drying time is not controlled by the amount of moisture removed; instead it is controlled by the temperature of the air along with drying time. ***

Restricted air is the most common cause of dryer service requests. The best way to prevent problems is to regularly clean the ductwork, both inside the dryer as well as in the building.

> ****Note: Modern energy efficient dryers are not designed to dry wet clothing. Instead the times/temperature options found on the controls are designed to remove the remaining moisture in damp clothes after much of the water has been removed in the spin cycle of a washing machine.*

Dryer Symptom	Possible Course of Action
Clothes are not dry at end of cycle (or take too long to dry)	• Clogged lint screen • Clogged duct o Possible restriction in the building dryer vent line o Kinked vent hose o Restriction in the dryer inlet or outlet • Overloaded dryer (too much in dryer) • Broken heating element (showing open on Ohm meter) • Air temperature limit switch constantly open • Washing machine spin cycle not functioning correctly (clothes too wet at beginning of cycle) • Inappropriate drying cycle was chosen
Dryer won't start (nothing functions)	• Door switch failure • Thermal fuse failure (showing open on Ohm meter) • Wiring harness disconnected • Power failure (unplugged or wire disconnected at terminal block) • Start button malfunctions
Dryer too hot (outside of the appliance)	• Clogged vent line • Kinked vent hose • Vent hose disconnected at dryer • Shorted heating element • Constantly Closed air temperature limit switch
Dryer won't heat (drum turns but no heat)	• Verify controls are not set to "Fluff" or "Cool down" • Heating element broken (shows open using Ohm meter) • Limit switch/thermistor stuck "OPEN" when should be closed (consult electrical diagram)
Abnormal noise heard during operation	• Thudding sound o Belt worn or damaged o Item too heavy or wet in drum o Imbalanced load • Squeak or squeal o Bearing on support / tension wheel worn o Belt worn or damaged • Scraping or rubbing sound o Felt pad or seal worn o Item in drum that shouldn't be there (often a coin or something similar) • Appliance not properly leveled

Clothes Washing Machine

The washing machine is possibly the most complicated appliance that a technician will maintain and repair. With electrical, mechanical, plumbing, health and resident property concerns, this appliance requires a varied knowledge to successfully maintain. Many newer machines have done away with mechanical timers and switches in favor of computer controls. These machines can often self-diagnose, requiring a technician to consult the use and care manual to interpret trouble codes caused by the machine.

There are two types of washing machines found in apartments, identified by how clothes are placed in the machine: **Front Load** and **Top Load**.

Anatomy of a Clothes Washer

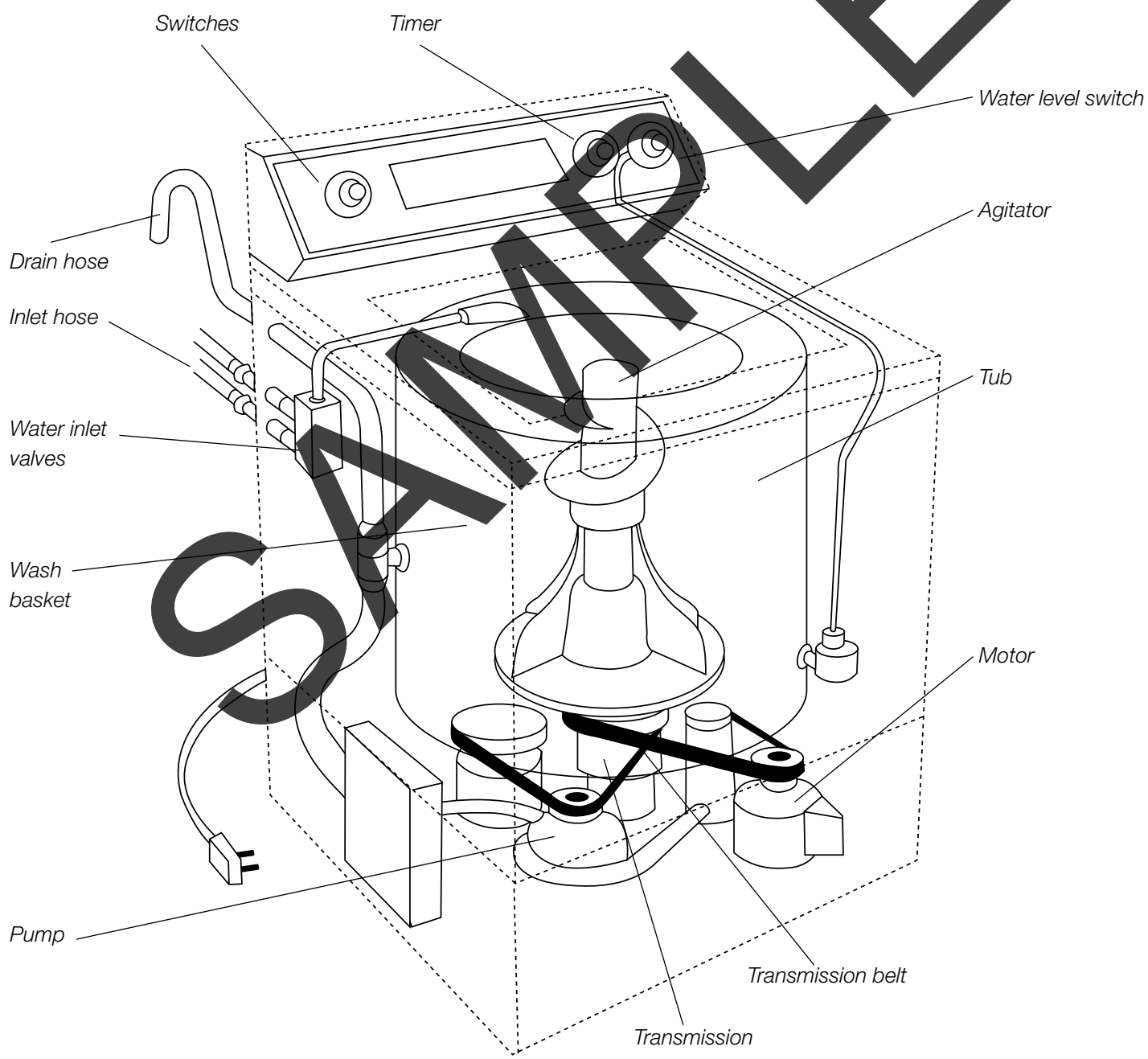

Top Load

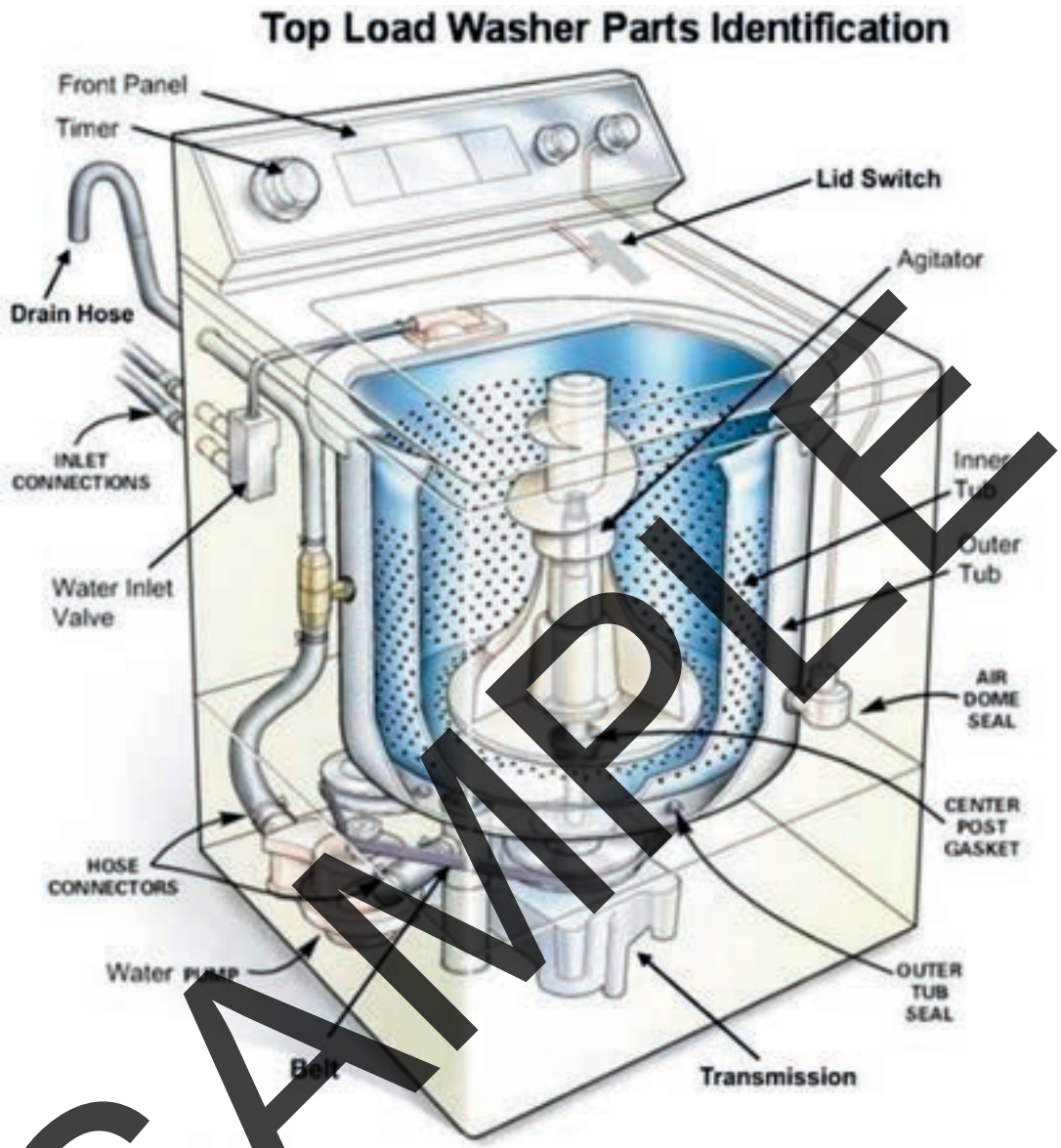

No matter how many features a top load machine has, its design is focused around four basic functions. These are Fill, Agitate, Drain and Spin. Each of these operations will occur* after clothes and the detergent (as well as bleach and/or softener if desired) has been loaded correctly. After loading, the user will make selections, if available, as to soil level, fabric type, spin speed, load size (small, medium, large) and water temperature (Cold, Warm, Hot). In newer machines when these selections are made and the machine is started, no operation will occur until the lid is locked. This will prevent the user from adding items once the fill has begun, thus helping to prevent over-filling the tub.

FILL: Once the machine is started power will be sent to the fill valve(s) by way of a pressure switch. The water temperature switch will control which or both fill valves will receive that power based upon selections made by the user.

The pressure switch has a tube connected that at the other end is attached to an air bell on the side of the tub.

As water fills the tub, water goes up the tube and pressurizes the air trapped there. The increased air pressure will open the circuit that includes the pressure switch. This opens the circuit going to the fill valve adjusting the water level based upon what the resident has selected*. This operation will be performed both at the start and after the first spin to provide water for washing and rinsing respectively.

Agitate: With the tub now full of clothes, detergent and water, these need to be mixed so that the soap and water will move through the cloth to lift away debris, odors and soil. To perform this the appliance will provide a mechanical means of creating a "flow" of the water through the clothes. Depending on the machine, this will be accomplished by moving the basket (found inside the tub) in a different direction than an agitator or activator (as some manufacturers call it). Depending on the design, this can also be accomplished using a pump (this may be the drain pump and a valving system or a separate pump specifically for this purpose).

The movement of the basket is accomplished by power being sent to the drive motor found under the tub. This motor will have a transmission attached to it. This attachment point can be a shaft if direct drive or a belt/pulley system if indirect drive. The transmission's job is to translate the speed or direction of the motor to the movement and operation of the operations*.

Drain: A pump will be attached at the bottom of the tub that will remove the water during the cycles as needed. The pump may be controlled electrically and have its own motor (separate from the washer motor), a connection to the drive motor, or it will function from a belt/pulley system controlled by the operational motor. Water that is taken from the tub will exit the washer at the bottom of the appliance and must go through a hose. The hose's outlet must be installed at least 30" from the floor and have a vented pipe attachment to prevent siphoning and other potential problems.

Spin: The spin cycle is used to remove water through centrifugal force. By spinning the clothes in the basket, water is forced out into the tub to be removed by the drain pump. This operation will occur at various times during the wash cycle depending on the design as well as the selections made by the user at startup. A final spin will occur for a longer period and remove as much water as possible in preparation for drying.

Power is supplied to the motor and the transmission will allow the agitator (if present) to spin freely from the tub/basket. The motor movement is transmitted to the basket either directly through the transmission or by a belt/pulley system.

*May be controlled using a circuit board. Consult manufacturer information for diagnostics.

Suggested order of operation for top load machine (duration of each cycle will be determined by user selection and design):

- User loads clothing items, detergents and other agents. User then makes desired selections on the control panel
- Lid lock engages
- Short spin of clothes to even out the load
- Water fills with selected temperature water to level selected by user (soap is released per design if a separate soap dish is present)
- Agitation occurs
- Drain occurs (slow spin possible to ensure even weight of clothing items during drain)
- Fill for rinse cycle
- Agitation occurs
- Drain
- Fast spin
- Lid lock disengages

Top Load Washing Machine Problems	Possible Causes and Solutions
No water entering machine	• Power supply • Water supply • Water hose check valve • Lid switch/latch broken (should show closed contacts) • Timer failure o Check for power being sent to fill valve contacts o Check for loose connections at terminals • Control board failure o Check for trouble codes o Use self-diagnose mode if present
Motor will not run (fill but no agitate/spin)	• Clogged fill valve screens • Loose connection or terminal • Faulty timer/control board • Motor windings. If grounded or open, replace motor. • Motor thermal fuse failure • Open Centrifugal switch on the motor (should be closed) • If a belt-driven model, turn the belt in the direction of agitation by hand. If the belt is locked, replace transmission
Washer will not agitate	• Restart cycle by unplugging machine and restarting the load • Broken or worn belt (if present) • Motor/transmission drive coupling (if present) • Check throwout bearing (if present) and clutch, • Verify components using schematic for operation • Use self-diagnose (if present)
Water will not drain	• Clogged drain line • Broken/worn belt • Pump motor assembly failure • Article of clothing between tub and shell • Check for “Suds Lock” o Happens when too much soap used o Motor will spin, but water will not be removed and there will be suds in the tub with the clothes o Rinse out pump using cold water • Use self-diagnose (if present)

Top Load Washing Machine Problems	Possible Causes and Solutions
Noisy/shaking washer	• Possible overload, unbalanced load or washing something that should not be machine-washed • Check for proper installation on a firm, solid surface • Adjust and lock leveling legs • Ensure removal of transit rod • Check the belt (if present) • Look for evidence of tub seal failure by viewing water under the motor • Check outer basket suspension rod or springs
Washer leaks water	• Leaking hose or hose washer • Leaking pump • Overloaded tub • Cracked tub • Leaking air bell hose seal • Faulty fill switch
Wrong water temperature	• Hose connections are backwards • Incorrect wiring at solenoid • Hose valves not opened all the way • Fill line safety check valve(s) are engaged. (follow hose manufacturer instructions to reset) • Filter screen clogged on the fill valves

Notes:

Front Load

Front Load Washer Parts Identification

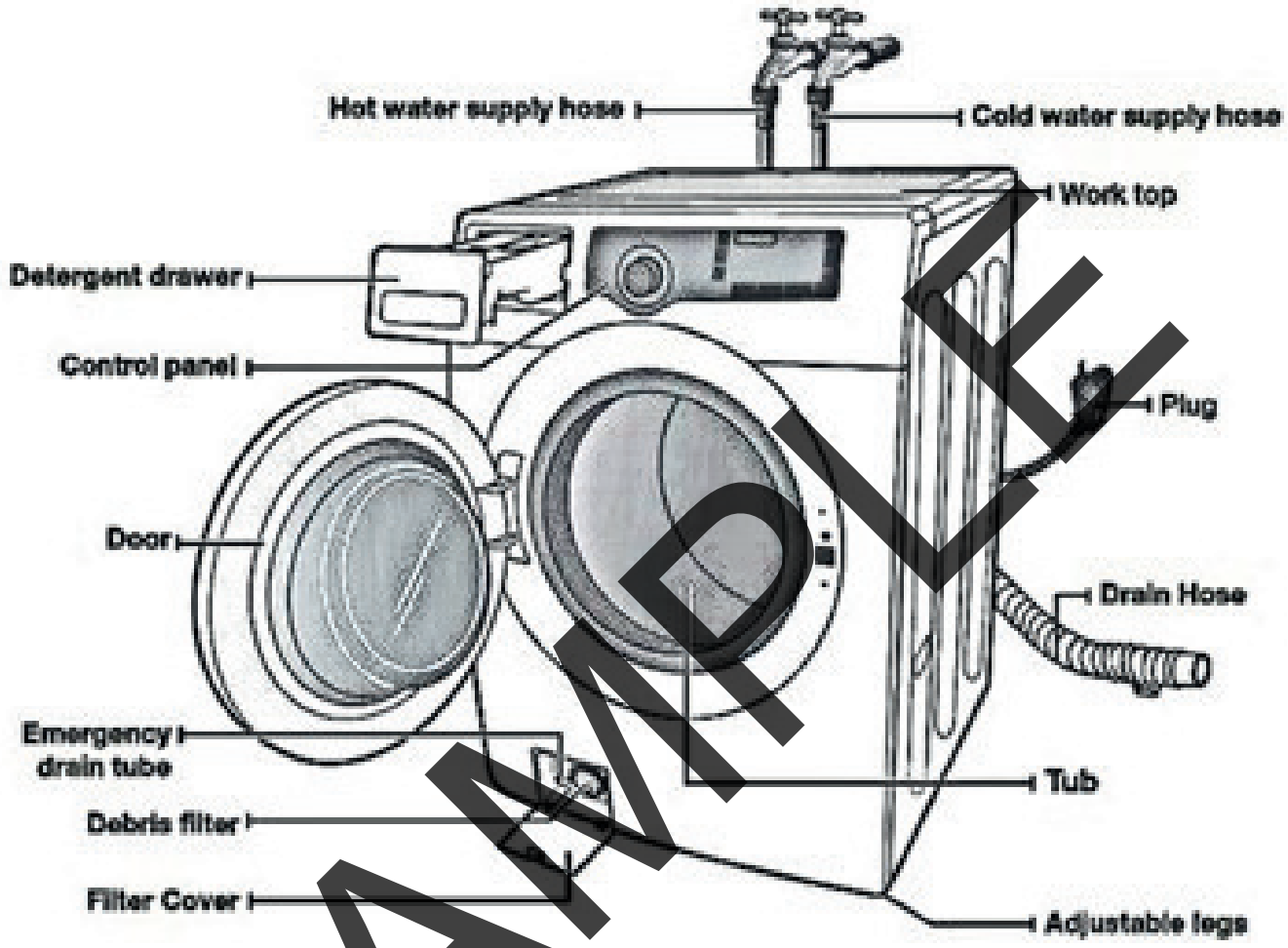

In residential use, front load washing machines have not been available for as long as top loaders. These machines are very successful at creating an increased energy efficiency while decreasing water use as well as wear and tear on clothes. Even though the outcome of clean clothes is similar for both types of equipment, the user experience as well as repairs and maintenance will be very different. Each manufacturer will have a different method of assembly so access to different parts of the mechanical operation will require a consultation with the use and care guide for the model you are working on.

Many models have a place where soap, bleach and fabric softener are added and stored in the machine itself. This will mean that the user will fill the specific reservoir and the detergents and other agents will be dispensed at the time and quantity determined by the appliance for the features selected.

To operate, clothes are placed into the basket. Care must be taken not to overload the washer or incomplete operation can occur. The user must make selections of the cycle, temperature, and any other options related to the wash load, then the door locks and the washer is started.

A front load machine has the same four operations as a top load machine.

FILL: The door locks in place to ensure the washing cycle doesn't push it back open and will stay locked throughout all cycles. Water is then added based upon the load size selection. In some cases, the water is added using a pressure switch like what is found in a top loader. Other times the water level is determined by a flowmeter in the water fill line. (Some models will use both as a safety measure.) Water will enter the tub either by a fill port after the solenoid valves or possibly through the detergent dispenser system. (It is possible that there is a heating element that will supply additional heat to the water.) When looking through the window on the door into the tub, it may appear that there is barely enough water to cover the load. This is proper. Some manufacturers only put enough water to completely submerge the clothes if the 'fabric softener' option is selected as this increases the amount of water required.

Tumble Wash (agitate): This cycle will give the basket a clockwise or counterclockwise rotation to agitate ("flip and flop") the clothes through the water and detergent. This adds air to the process and uses gravity to pull the water through the clothes, which makes it more effective with less water usage. In addition, clothing doesn't rub against itself as much meaning less wear and damage to the material. The direction and speed of the agitation is determined by load size, soil level, as well as any other selections made on the control panel at the start of the cycle.

Drain: The pump motor assembly solenoid receives power to remove water from the bottom of the tub. Often, there is an access found in the front or back at the bottom of the machine which can be used in case an item makes it past the basket seal, which protects the pump assembly from damage. Water leaves the machine by the bottom of the appliance.

Spin: The spin cycle begins after all standing water is removed from the tub while the drain cycle is still operating. The fill valve will release water, spraying it on the spinning clothes to remove any remaining soap or soil. The speed, duration and direction of the spin changes multiple times throughout this cycle to ensure effective rinsing with the least amount of water. The speed can be as low as 90 rpm and up to over 1000 rpm depending on design and the selected options. Increased speed will remove more water, decreased speed will reduce wrinkling, so it is an operational trade off. (Warning: some machines feature a 'line dry' option that doesn't remove enough water for a clothes dryer to be used. This feature is intended for the clothes to be hung up and is the best way to use the least amount of energy. If a resident inadvertently selects this option, the clothes will come out very wet.)

Due to the orientation of the tub, a front load machine is much more likely to encounter odor problems than a top load. The odor can be prevented by following the operational guidelines recommended by the manufacturer of the equipment:

- Do not close the door when the washer is not in use.
- If the washer is not going to be used for longer than 24 hours, pull open the detergent reservoir to allow better air circulation throughout the tub
- Use a towel to dry the folds of the front door seal when washing is completed. This will increase the life expectancy and decrease microbial growth in damp areas of the seal.
- Follow the manufacturer guidelines for frequency of a sanitizing cycle for the washer. This may require the addition of bleach or other specified sanitizer to remove microbial growth from collecting between the basket and the tub.
- Use only the specified detergents and agents (often labeled HE) stated by the manufacturer. Using non-HE soap will decrease performance and possibly damage parts and/or the equipment.

Note: For all front load troubleshooting, use the diagnostic function if available. Follow manufacturer's instructions for access to this feature.

(Reference manufacturer's instructions for translation of trouble codes)

Front Load Washing Machine Problems	Possible Solutions
Nothing happens	• Check power (should be 108-132V) • Unplug machine for 5 minutes, Re-try. • Check for fuse or circuit breaker on the control board • Loose connection at terminal block
Washer will not start	• Open and close the door, Re-try • Place washer in service mode to check door lock assembly • Check wiring harness and plug connectors • Check control board output • Attempt a different cycle
Washer does not dispense detergents and/or other agents	• Check if the appliance is level • Clean dispenser per manufacturer instructions • Check control board output • Check fill valve line for clog/kinked hose
Washer does not fill or water enters slowly	• Check screens at the water valves and hoses • Ensure supply lines are connected to the correct attachment points, opened all the way, and not leaking • Check pressure switch for proper operation • Check control board output • Check pump motor assembly
Washer does not drain or overfills	• Verify the machine is level • Check the pressure switch for proper operation • Check pump motor assembly • Verify the machine is level • Check the pressure switch for proper operation • Check pump motor assembly • Check control board output • Check drain screen for trapped debris
Washer does not spin or rotate basket	• Check the dispenser drawer. (on some models this must be completely closed for operation) • Check drive belt and related assembly • Check control board output • Check the drive motor for operation (ensure the shaft spins freely) • Check for thermal overload on the drive motor. Reset if necessary

Front Load Washing Machine Problems	Possible Solutions
Drive motor overheats (thermal overload activated)	• Disconnect power o Leave unpowered for 30 minutes so motor can cool o Check belt and related assembly for wear • Ensure belt path is unobstructed • Check for articles of clothing between tub and shell • With motor cooled, re-try. If motor doesn't start, test for continuity or short circuiting
Washer does not complete the cycle or stops mid-cycle	• Too much soap used
Washer makes noise or vibrates/moves while operating	• Ensure all shipping bolts/rods were removed upon installation • Check for foreign objects in the tub • Check for articles of clothing between tub and shell • Make sure washer is level • Wash load may not be distributed correctly. Stop load, redistribute load and re-try

Notes:

Electric and Gas Ranges

Safety

- All ranges when installed properly will include an anti-tip device. This bracket or other design ensures that the stove will not tip over. Its presence should be verified during every apartment turn and any time service is required.
- Lockout/Tagout is required when performing service. This goes above just unplugging the range. If a locking device at the breaker is not used, a plug lock should be applied to ensure the range is not energized while service is being performed.
- Chemical safety must be observed.
    - Oven cleaners should NOT be used in a self-cleaning oven unless it specifically states, “safe for use in self-cleaning ovens”.
    - Ammonia-based cleaners should not be used on plastic components (such as knobs and brackets).

Technical and Operational Information:

In general terms, the operations of both electric and gas ranges are similar. In both cases, heat is used to raise the temperature of food. On the cooktop, food is placed in a pan/pot and the temperature is raised by heat applied to the bottom of the container.

In the oven, food is placed inside the box, and heat is applied from all directions. For best results, whether cooking or baking, the oven must be preheated to the desired temperature. Most of the manufacturers state that it may require up to 15 minutes to achieve 350°. In addition to preheating, the oven must be clean for even heating to occur.

If the oven is labeled as “self-cleaning” it will require some special consideration. The oven has a coating on its internal surface that will release food remnants at high temperatures (often over 800°F). These food remnants will then burn up and leave behind an ash that can be easily removed by wiping with a wet cloth at the end of the cycle, and after the oven has cooled down. The self-cleaning cycle is initiated by the user and the door will be securely locked until the cycle is completed (this can take a few hours).

Newer ranges have more advanced controls and technology, allowing for user programming or other “smart” technology. These newer controls provide various methods a technician can use to calibrate or adjust as needed. The methods vary by manufacturer and require the manufacturer’s documentation provided for each range. It’s a good idea to keep these on hand for reference whenever performing service. Make sure that the manufacturer’s instructions are always returned to its proper location.

New convection ovens utilize air circulation with fans inside the oven to provide for faster and more even cooking.

It should be noted that almost any diagnosis of operational issues with a range should include verification of how it is being used. Different cookware, bakeware, recipes and even ingredients can produce wide differences in operation that may be responsible for the initial resident complaint.

Electric Range

Power Supply

Before any other electrical checks are performed on the oven, check the power going into the range. This initial step is performed by removing the back cover and visually inspecting the terminal block found there. Once a visual inspection is completed, verify there is 120V on each leg to Neutral and Ground.

If any connections are loose, they can overheat, creating such problems as voltage drop and/or high amp draw on either L1 or L2.

NOTE: for safest operation, there should be a dedicated ground attached to the case of the range. This can be accomplished by either a 4-prong plug, or a separate bonded ground.

Stovetop

The stovetop of an electric range uses resistance of the infinite switch which in turn regulates the burner coil (usually 6 or 8 inches). The burner coil then creates heat when the 208/240 volts infinite switch is closed.

The infinite switch doesn't control the temperature directly; instead, it has a small heater and bi-metal switch inside that controls the amount of time the circuit is open versus closed. This means that when the user selects "HI" on the switch, the circuit will be a constant 208/240 volts at the burner. When the user selects "LOW" on the switch the circuit is closed for a short period of time (heating the element) and open for a longer period (not heating the element). On medium, the switch is closed for the same amount of time as it is open.

Oven

The oven temperature is regulated by a sensor that is found on the side or back of the oven. This sensor uses a thermistor in newer ovens, or a capillary/pressure switch in older ones. The sensor will open or close the 208/240 volts switch to initiate heat and maintain the temperature in the center of the oven within five degrees of setpoint (temperature selected by the user) after the stove is preheated.

Notes:

Anatomy of an Electric Range

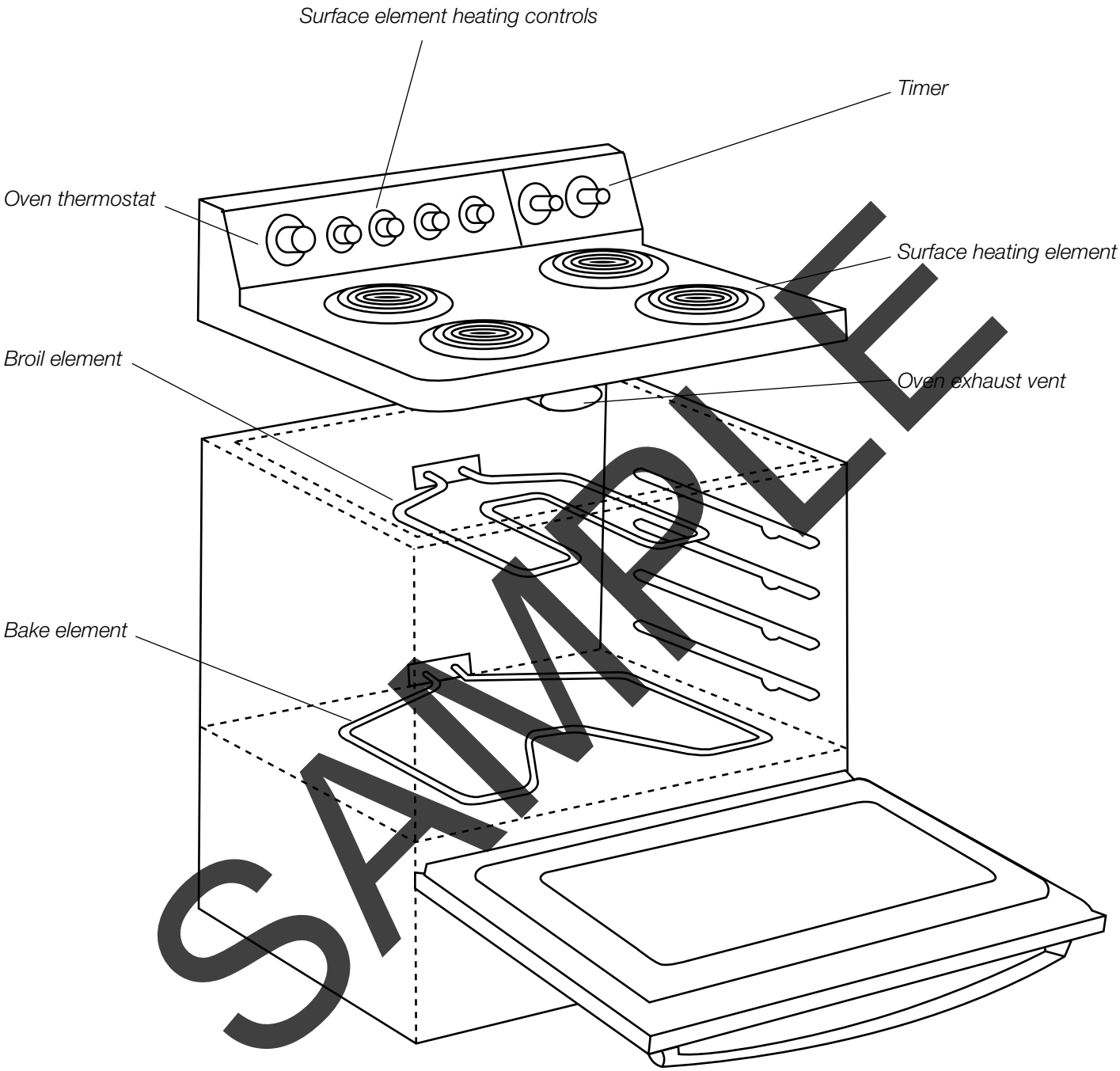

Electric Range Problem/Symptom	Possible Solution
Stovetop is not working	• One of the infinite switches has failed to test: o disconnect power from the range and the infinite switch. o Turn the knob to “high” o Test terminals for continuity • L1-P • L1-H1 • L2-H2 o No other continuity than what is stated here (none from L1-L2) • Incorrect infinite switch used (make/model/burner size specific) • Check the stovetop control board • Short in the wiring harness
Burner continuously on a constant temperature no matter what setting is selected	• Infinite switch failure • Wrong infinite switch used • Verify the burner has resistance. Either zero Ohm or a high Ohm reading indicates failure • Incorrect wiring • Check stovetop control board
Inconsistent cooking in the oven	• Oven is dirty • Oven is not pre-heated • Oven needs to be calibrated
Oven does not reach the desired temperature	• Problem with power (disconnected or poor) • Oven is Dirty • Oven sensor is broken
Oven not heating at all	• Oven switch has failed • Burner element or wires is shorted or is open

Notes:

Gas Range

Cooktop

A gas range cooktop uses heat generated by releasing gas through a burner causing combustion. The gas enters the manifold (pipe with the valves attached) through a regulator. This regulator is specific to the stove and decreases the gas pressure to less than 1 psi. At this low pressure, gas mixes with air in the burner and gets ignited due to a spark or a standing pilot light, depending on the model of the stove. A regulator should release the gas at a consistent volume no matter how many burners are being used.

- **Standing Pilot:** This ignition system involves a very small amount of gas being continuously released to produce a small flame found in between burners. This flame is adjusted at the pilot adjustment screw found at the manifold. The flame should be large enough to be stable during normal operation, without being too tall to cause danger to the person using the stove (usually about ¼" in height).
- **Spark Ignition:** A spark igniter will be found in between or near burners and positioned in a way that will ignite the gas when released by the gas valve at the manifold. When the knob is turned to the area marked "light" a circuit in the spark module (found on the back of the range) is completed producing the "TIC, TIC, TIC, TIC…" sound. This sound is made when a small arc is made and should stop as the knob is turned further into cooking position after the burner ignites.

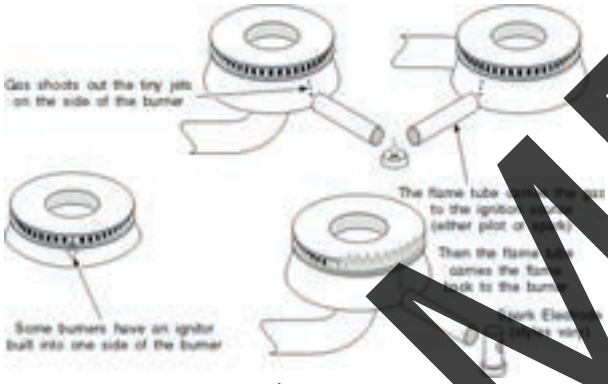

The height of the flame, and therefore the heat for cooking, is controlled by the valve, attached to the knob turned by the user. This valve will allow gas to pass through depending on how "HIGH" or "LOW" the knob is placed.

The burner should produce a flame of an even height all the way around the burner. If this doesn't occur, or if there are gaps in the flame, the orifices (small holes around the perimeter of the burner) should be cleaned.

Oven

The oven will produce even heating, after it is preheated, by having a burner found under the bottom of the box. (This means that plastic cookware should not be stored in the drawer under the oven. In some cases, this is where the broiler is found.) The burner ignition sequence may vary by manufacturer's design. Generally, it follows this order:

1. Temperature is selected by the user (either on the control panel or knob)
2. Igniter is powered (electronic or hot surface ignition) or gas pressure is elevated (if standing pilot)

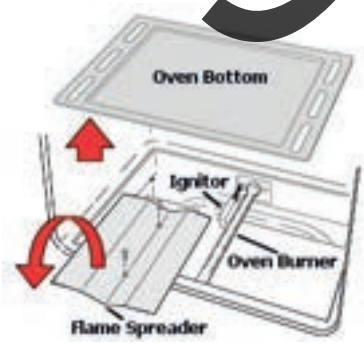

   a. If the oven features an electronic ignition, the glow bar/bulb surface will heat up when voltage is applied. As the surface heats up, the amperage in the circuit increases. Once the amperage gets to the desired range (between approximately 2.5 and 4 amps) the safety valve will open, releasing gas to the burner for ignition.

   b. If the oven features a standing pilot, the gas pressure elevation will cause the small pilot flame to get bigger. This, in turn, will cause the flame to engulf the sensing bulb connected to the safety valve. Once that sensing bulb achieves its design temperature, the safety valve will open releasing gas to the burner to be ignited.

3. Once the burner is lit, the temperature will be regulated by a sensor located inside the oven on one of the walls. This temperature sensor is calibrated to the temperature in the center of a CLEAN oven. The oven valve will be open/closed based upon this regulation.

Anatomy of an Gas Range

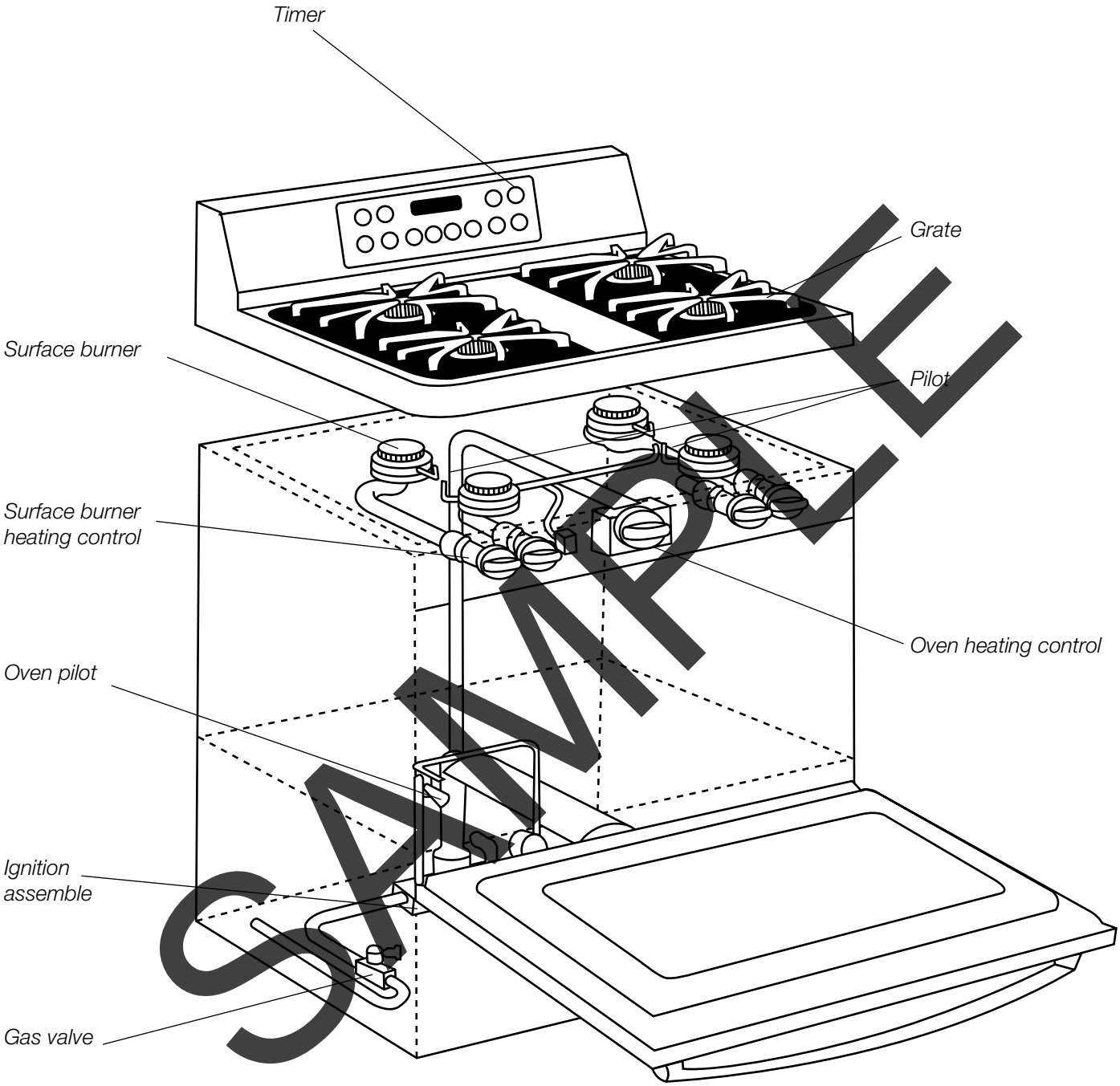

Gas Range Problem/Symptom	Possible Solution
Inconsistent burner operation (stovetop)	• Clean/clear the burner orifice(s) • Verify operation of burner valve by turning it from high to low. The flame height should change accordingly • Verify operation of regulator by turning on all the burners. With all burners on, the flame height shouldn't differ from when there was only one burner
Burner will not ignite (standing pilot)	• Clean burner orifice near ignition assembly • Verify pilot light is lit • Ensure flash tube (small diameter tube from the burner to the pilot flame) is not obstructed • Attempt to ignite burner with match to verify gas is being released when valve is opened
Inconsistent cooking in the oven	• Oven is dirty • Oven is not pre-heated • Oven temperature needs to be calibrated (Ref. manufacturer's instructions) • Ensure that oven vents at the stovetop burners are not obstructed
Oven not heating at all	• Ignition sequence failure • Safety valve failure • Control board failure • Ensure proper gas pressure
The range produces the TIC-TIC-TIC sound, but the flame does not ignite	• Check for a spark at the burner selected to ignite. If no spark, clean the ignition surface • Verify gas supply coming to the burner when the knob is turned "on" • Ensure proper ignitor spark gap
The range continues to make the ticking noises even when all the burners are turned off	• Verify all burner switches are in the "off" position. • Look for an ignition switch showing continuity when "off" is selected on the knob

Are there other problems you have frequently fixed?

Notes:

Dishwasher

A dishwasher is a durable device that is simple in its operation. The variables that determine its effectiveness are often the cause of problems. Let's review the expected operational specifics to ensure we understand how the dishwasher is supposed to operate.

Once the dishes are loaded into the dishwasher, detergent and agents are filled into the appropriate dispenser and the door closed. Hot water is delivered from the kitchen sink water supply.

When the on button/switch is engaged, the pump will often first pump out or drain any standing water in the bottom. This water could have come from water dripping off the dishes when the washer was loaded and can decrease the effectiveness of the soap.

After the pump has removed the standing water, 120 volts are sent to the fill solenoid, opening the fill valve and allowing approximately two gallons of hot water to enter. At the same time, the pump begins to spray this water around to initiate the cleaning process.

The heating element is energized at this point to aid in raising the water temperature to approximately 140-150°F. At this temperature the detergent will be most effective in dissolving fats and proteins on the dishes. The soap dish opens only after a delayed period of time to ensure the proper temperature is reached.

After the soap is dispensed to remove and emulsify any remaining food, the dishwasher is placed in a drain cycle. The motor may continue to run, and the drain solenoid is energized forcing water to go through the drain line. Alternatively, the motor direction may be reversed. If the direction changes, the design of the impeller in the pump will spray the water back to the dishes in one direction, and the reverse direction will carry the water out the drain. It is also possible that there is a separate pump that is used to pump the water out of the tub (this is rare).

The fill, rinse and drain cycle is repeated to allow water to remove any remaining soap or food residue and to prepare the dishes for the sanitizing dry cycle. If used during this cycle, rinse aid is dispensed to assist in the evaporation of water. If heat dry is selected the heating element raises the temperature inside dishwasher to speed up drying process.

If air dry has been selected, after the drain cycle occurs, and a short sanitizing burst (about five minutes or so) of heat has been produced from the heating element, the timer will complete its cycle and the door is expected to be opened to complete the drying.

Following is the common order of operations for a dishwasher:

1. User loads dishwasher, adds rinse aid and soap to dispensers, closes door, selects operation and starts machine.
2. Initial pump out
3. Fill
4. Preheat/rinse
5. Open soap dish
6. Wash dishes
7. First Drain
8. Fill
9. Rinse (same as wash; without detergent)
10. Second Drain
11. Sanitize
12. Dry (if resident has selected air dry, they are to open the door after full cycle is complete)

Anatomy of a Dishwasher

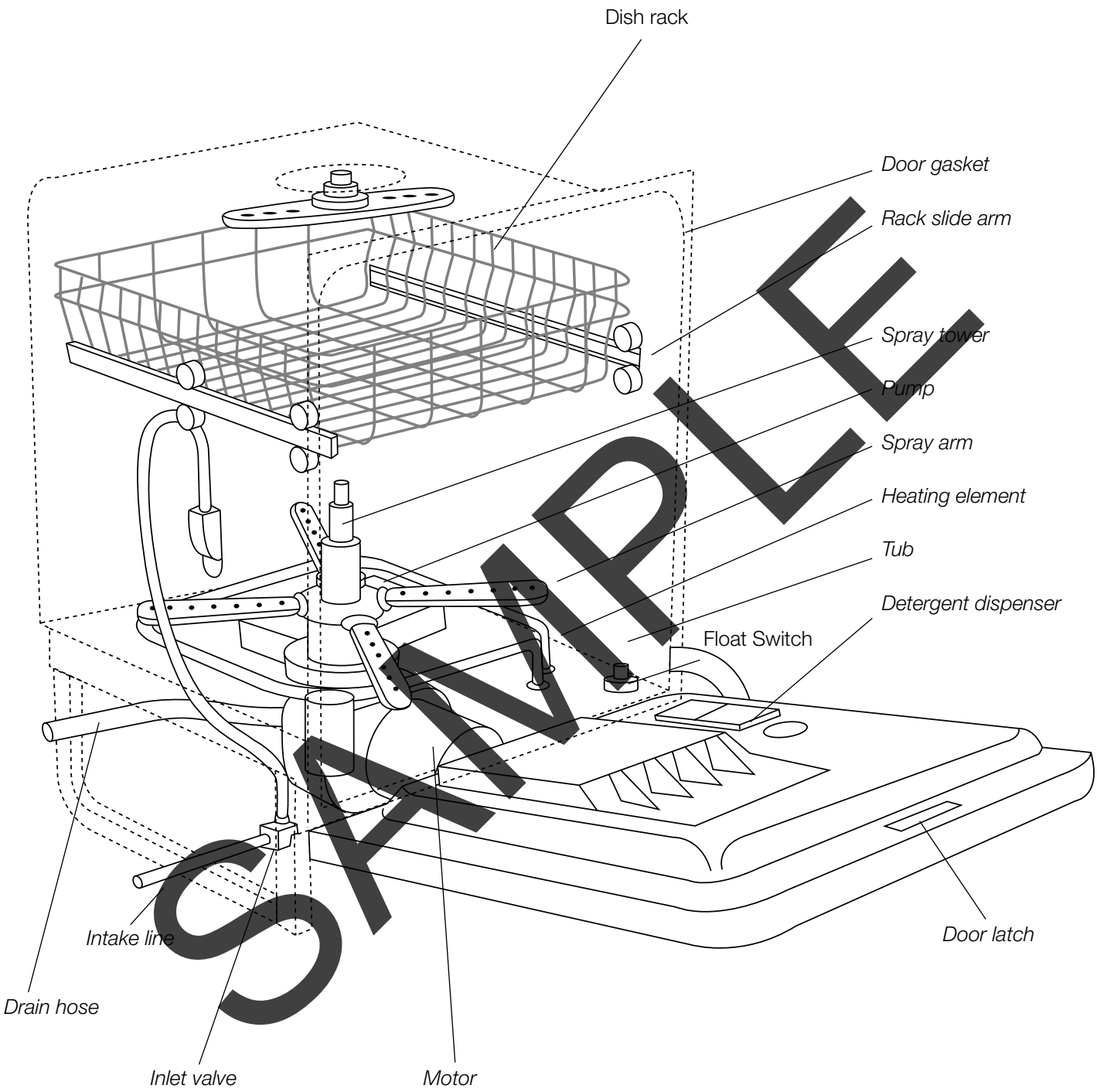

The problems and symptoms listed below cannot be totally comprehensive. Please refer to the individual manufacturer's literature and instructions.

Dishwasher Problem/Symptom	Possible Solution
Dishwasher not starting	• Verify power to dishwasher • Verify power to timer or control circuit board • Verify water to fill valve • Test the door switch for continuity when the door is open/closed • Verify the presence of a GFCI or fuse at the power connection • Ensure float/pressure switch is properly operating
Cycle not completing	• Test timer or control circuit board • Verify water to fill valve • Test the door switch for continuity when the door is open/closed • Ensure float/pressure switch is properly operating • Failed detergent actuator switch
Water not filling/not enough water	• Check water pressure • Verify the screen is clear on the inlet side of the fill valve • Verify power to the fill valve solenoid • Check the fill valve solenoid for continuity. If testing open, replace fill valve • Improper loading of dishwasher
Water leaking out of the door and/or under the appliance	• Wrong type of soap was used • Door seal/gasket damaged or out of place • Corner seal missing/clogged/damaged • Float/pressure switch failure. Test for continuity, should be closed when the tub is empty. • Check supply and drain line connection • Check pump and motor gasket failure • Door has been bent and is no longer sealing • Improper loading of dishwasher
Dishes not getting clean	• Verify temperature of the water entering dishwasher (test the kitchen sink faucet, water temp. should be approx. 110-120°.) • Verify that soap that is being used is designed for machine. (NO sink or hand wash soap) • Too much or not enough soap • Verify use of rinse aid • Check the condition of the spray arm(s) o Are the holes open? o Does the arm move freely? • Check the water level in the tub. • Check for obstructed drain screen

Dishwasher Problem/Symptom	Possible Solution
Dishes not drying	• If plastic dishes/containers are used, it is very possible that they will NOT dry. A dishwasher's timing is designed for ceramic/glass type material dishes, not for plastic ones. • The dishes need to be loaded with enough room for both water and air to circulate in between the dishes. • Ensure rinse aid is being used • Check for clogged drain line • Verify the presence of a "loop" in the drain hose elevating that line to above the final location of the drain connection to the disposal or pipe. • Test the heating element for continuity. It should have some resistance • Verify power to the heating element at the appropriate place in the cycle.
Water not draining	• Check for clogged drain line • Check the ball on the check valve • Verify the presence of a "loop" in the drain hose elevating that line to above the final location of the drain connection to the disposal or pipe • If water continues to be visible in the floor of the dishwasher, it is possible that an air gap is needed. (possibly required by code) • Clogged strainer or sump screen • Appliance not levelled
Soap dish not latching or staying closed	• Too much soap or soap build up in the dispenser • Broken component/spring/actuator in the latching mechanism
The buttons on the control panel do not light up	• Check power • Look for short in the wiring/harness • Failed control board
All the lights on the display keep blinking	• Verify with manufacturer documentation for meaning
Humming noise from dishwasher	• Locked up pump motor assembly • Debris and foreign items in pump motor assembly

Notes:

Refrigerator

The refrigerator is an appliance that operates like a small air conditioning system. An air conditioner removes heat from the apartment. A refrigerator removes heat from inside an insulated box. The lowered temperature allows for the storage and preservation of food.

Many refrigerators will have a separated area for both fresh food and frozen food. These areas will remove heat to different levels. In general, the temperature in the fresh food section will be 38-42°F and the frozen section will be between 0-10°F (these temperatures can vary by operation). The temperature will be controlled in an older refrigerator by a capillary tube/ pressure switch (often called a cold control) or in a newer refrigerator by a circuit board.

As the temperature in the refrigerator will vary every time the door is opened, taking an accurate air temperature is difficult. A good way to determine the temperature is to use an infrared thermometer on several different food items inside. This way, you are getting an accurate temperature over a longer time period. (Note: squeezing ice cream is **NOT** a good indicator.)

With a portion of the refrigerator below freezing, and moist air being introduced to the inside of the appliance every time the door is opened, the evaporating coil will eventually freeze. As this ice will decrease air flow and not allow for heat to be absorbed from air, it needs to be thawed. This thawing occurs due to a heating element found next to the evaporating coil. This defrost cycle will be initiated by a defrost timer (in an older refrigerator) or by a circuit board (in a newer refrigerator). As different appliances will require longer or shorter to thaw the coil, the duration of the thawing is controlled by a defrost thermostat. The defrost thermostat is either one or more bi-metal switches or thermistor. A technician can initiate or end the defrost cycle by using the manual advance on a refrigerator that has a defrost timer, or by following the manufacturer instructions (if a circuit board is used).

Anatomy of a Refrigerator

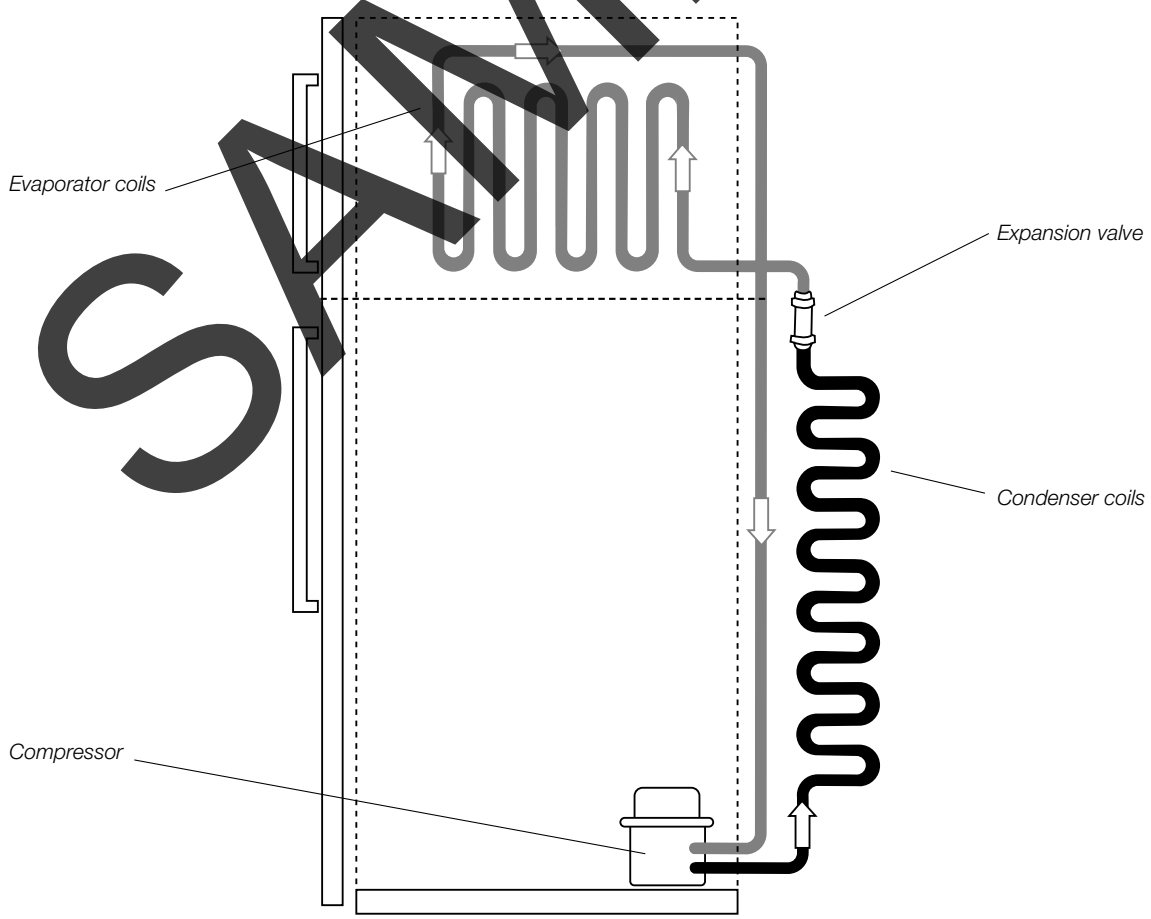

Notes:

The components shown here operate like an air conditioning system*. Let's look at their function.

- **Refrigerant:** Chemical used as a heat carrier that changes from gas to liquid then back to liquid in the refrigeration cycle.
- **Compressor:** The compressor moves the refrigerant around the system. This refrigerant will absorb the heat inside of the appliance and discharge it outside of the appliance.
- **Condenser coil:** This coil, which may be found behind the refrigerator (as shown) or under the refrigerator. It allows the heat absorbed inside the refrigerant to be released into the room.
- **Evaporator coil:** Found in the freezer section, this coil will allow the much colder refrigerant to absorb heat from the air that passes across it. The air will have picked up heat from food placed in either the fresh food or freezer section by the resident.
- **Expansion valve:** As it cools, the refrigerant condenses into liquid form and flows through the expansion valve. As it flows through the expansion valve, the liquid refrigerant moves from a high-pressure zone to a low-pressure zone, so it boils and vaporizes. It also monitors and meters the flow of refrigerant to the evaporator.

**As this is a sealed system, it is rare for an apartment technician to perform refrigerant system service.*

Anatomy of a Refrigerator (continued)

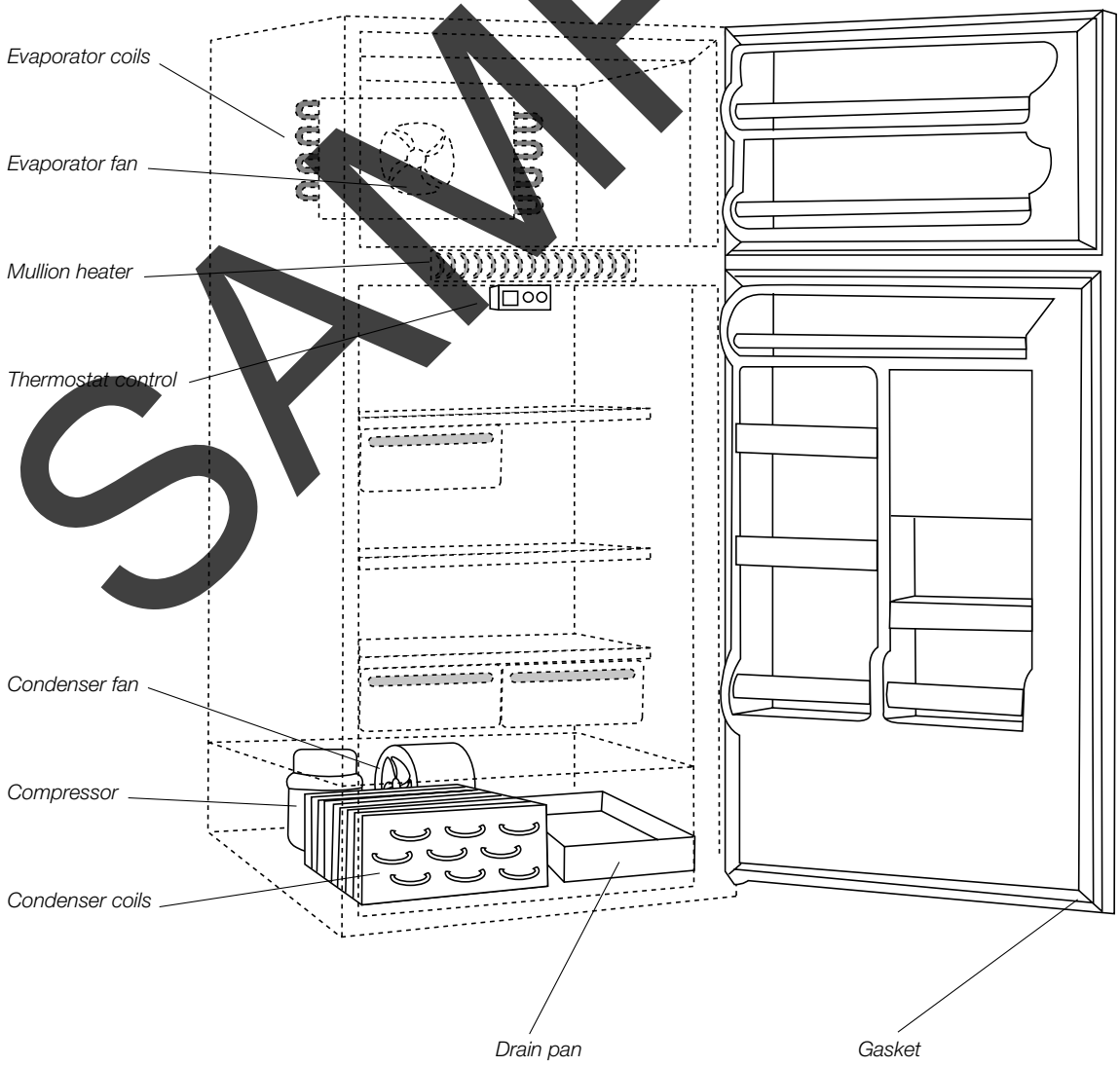

Refrigerator Schematic

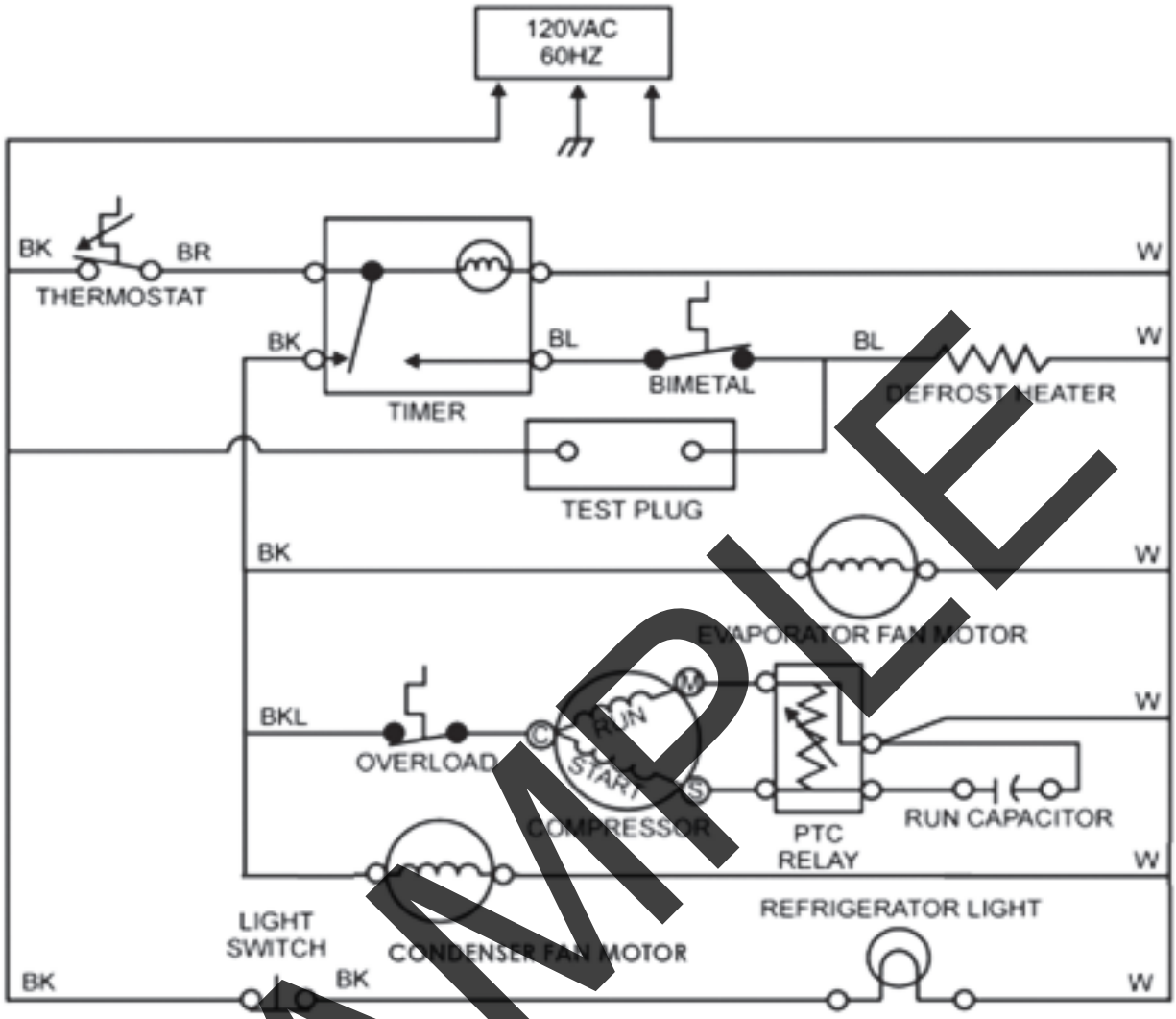

Notes:

Refrigerator Problem	Possible Cause/Solution
Refrigerator not cold enough	• Check the temperature control Visually inspect gasket for damage • Check the door gasket's magnetic seal using a dollar bill o Place dollar bill in between gasket and frame with the door closed o Slide the bill around all four sides of the door o If the bill slides with no resistance in any area of the gasket, the magnet has gone bad • Look for ice or other obstruction in the duct between the freezer/fresh food sections of the appliance • Defrost cycle not functioning correctly • Condenser coil blocked/dirty • Condenser fan not operating/dirty • Damper control stuck closed • If Icemaker is present, verify it is not constantly operating. (Icemaker can have a heating element that if malfunctioning will add heat.) • Compartment overloaded not allowing proper air circulation • Open liquid containers in fresh food compartment • Make sure top of appliance and coils are free of obstruction
Refrigerator is too cold	• Check the temperature control • Beware of placement of food. Fruits/vegetables should be placed in the crisper drawer. This will keep the below freezing air from freezing the food upon entry into the fresh food compartment. o Coldest places will be the back and bottom o Warmest places will be the front/door and the top • Damper control stuck open
Evaporator coil is frozen solid	• Defrost cycle not starting • Evaporator fan not functioning • Defrost element broken • Defrost thermostat/thermistor malfunction • Freezer or Fresh food door seal failure (test with dollar bill as above)
Standing water in the bottom of fresh food compartment	• Clogged drain in the freezer • Door gasket failure • Open liquid containers • Obstruction at the air duct between the freezer and fresh food compartments
Abnormally loud noise coming from refrigerator	• Dirty condenser fan • Food pressing the back of the freezer compartment against the evaporator fan • Clogged condenser coil • Refrigerator installed without proper clearances (or clearances blocked) • Foreign items in condensing coil • Levelling of refrigerator • Compressor beginning to fail

Refrigerator Problem	Possible Cause/Solution
Compressor/Refrigerator will not run	• Check Power (should be ~120V at plug) • Check defrost control • Wiring harness/connection undone • Check control board • Test the compressor overload • Test the compressor relay • Icemaker operations (some models)
Door handle installed on wrong side of the door	• Follow manufacturer instructions to move handle and hinges o Remove items from the shelf o Move any bracket and spacers as necessary
Door won't close	• Verify that the refrigerator has a slight tilt backwards • Magnet door seal may be bad (check with Dollar bill) • Door may require straightening

Notes:

Key Takeaways

It's not easy to sum up a course that has covered as much ground as this one has. But we've tried, by identifying several key takeaways you can use once you get back on the job:

Appliance Safety Takeaways

- Follow the correct safety procedures whenever you work with plumbing or electricity. Do not cut corners or take risks.
- When repairing an electrical appliance such as a clothes washer, turn off power to the circuit. Use a circuit tester or multimeter to make sure power is off.
- Follow lockout/tagout procedures.
- Wear the correct personal protective equipment—in most cases, eye protection—and wear non-slip soled shoes.
- Call a plumber, an electrician, or an appliance repair specialist to do work for which you are not qualified.

Appliance Repair and Maintenance Takeaways

- Use the repair techniques you've learned today to improve the speed and quality of your work.
- Do your best to keep up with the latest advances in tools, technology, and techniques as they relate to appliance maintenance and repair.
- Feel free to use this *Resource Guide* when you're back on the job.

With these takeaways in mind, let's now move on to having you write an action plan. Turn to the next page in your *Resource Guide*.

Notes:

Action Plan

Based on what you've learned in this course, write down at least one thing you want to start, stop, and continue doing when you return to your apartment community.

One Thing I Want to Start Doing:

One Thing I Want to Stop Doing:

One Thing I Want to Continue Doing:

Work on these things for the next month. You'll most likely improve your on-the-job skills, feel more confident, and enjoy your time as a maintenance technician even more.

Acknowledgments

Subject Matter Experts

The NAA Education Institute wishes to thank the following apartment industry professionals for contributing their time and expertise to the rewrite of the Certificate for Apartment Maintenance Technicians program:

Paul Rhodes, CAMT
National Maintenance & Safety Instructor
National Apartment Association Education Institute (NAAEI)
prhodes@naahq.org

Vicki Sharp, NALP, CAPS, CDPM
Senior Director of Property Management
Meridian Residential Group
Vickisharp@meridianres.net

Paul Perez
Instructional Assistant
Gudelsky Institute for Technical Education
Rockville Campus
Paul.Perez@montgomerycollege.edu

David Jolley, CAMT
National Director of Maintenance/Purchasing
Pinnacle Management
DJolley@Pinnacleliving.com

Scott F. Ployer, CPM, MFE, NAHP-E, CGPM
Vice President of Operations
Trinity Management LLC

Mark Vanderhoof
Corporate Maintenance Trainer
CWS Apartment Homes, LLC
mvanderhoof@cwsapartments.com

Keith Gibson
Director Maintenance Trainin
Post Properties, Inc.
Keith.Gibson@postproperties.com

Chris Caramanica, CAMT, LEED, AP OHM, CMM
Director of Facilities
WinnCompanies
ccaramanica@winnco.com

Craig Batholomew, CAMT
Director of Resident Services
Hawthorne Residential Partners
craignc@msn.com

NAAEI would like to thank the following individuals for their time and expertise in updating the CAMT Job Task Analysis:

Ed Kiper / David Jolley / Keith Gibson

NAAEI would like to credit the following companies for use of photos:

Carrier Corporation
www.Carrier.com

Wilmar Industries
www.Wilmar.com

National Apartment Association Education Institute
4300 Wilson Boulevard, Suite 800
Arlington, VA 22203
703-518-6141 | www.naahq.org

NAA
NATIONAL APARTMENT ASSOCIATION
Education Institute

CAMT
CERTIFICATE FOR APARTMENT MAINTENANCE TECHNICIANS
ANSI